POLARIS® CELLULAR SHADES (CLUTCH SYSTEM)
INSTALLATION INSTRUCTION

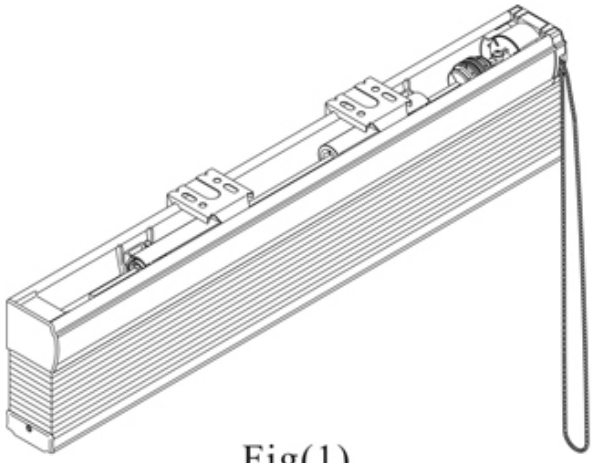

Fig(1)

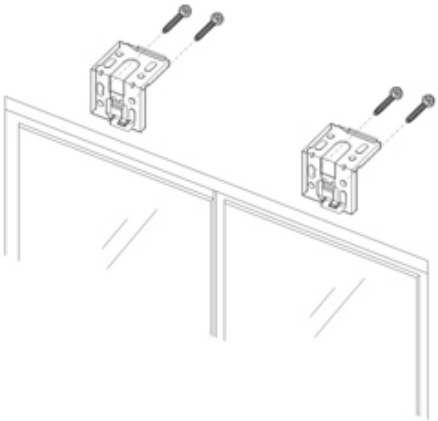

Fig(2-1)

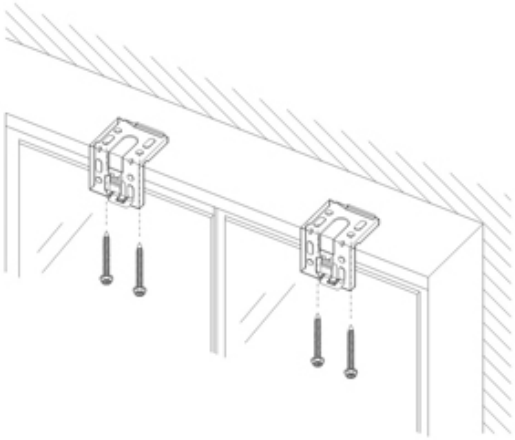

Fig(2-2)

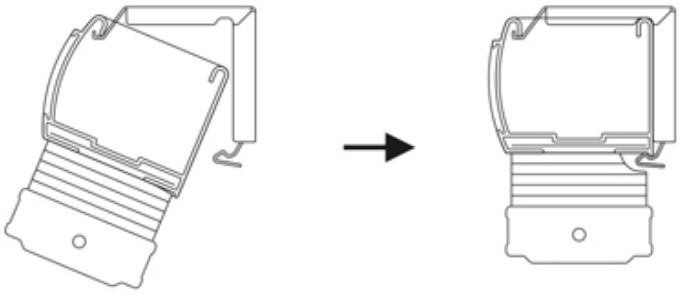

Fig(3)

Please allow 24 hours for your shade to drop to its actual height when first installed due to the nature of the fabric.